IJIREEICE ISSN (O) 2321-2004, ISSN (P) 2321-5526

International Journal of Innovative Research in Electrical, Electronics, Instrumentation and Control Engineering

Impact Factor 8.414 ⁜ Peer-reviewed / Refereed journal ⁜ Vol. 14, Issue 11, November 2026

DOI: 10.17148/IJIREEICE.2026.141119

EXG-BASED SMART WHEELCHAIR WITH ESP32 AND IoT CONTROL

Dr. Anjan Kumar B S[*1], Akash Bagi[2], Jashwanth J[3], Nithin H[4], Pavan Kalyan N[5]

Assistant Professor, Department of Electronics and Instrumentation, Bangalore Institute of Technology, Bengaluru, India[1]

Bachelor of Engineering Students, Department of Electronics and Instrumentation, Bangalore Institute of Technology, Bengaluru, India[2-5]

*Corresponding Author

Abstract: This smart wheelchair has been developed for people with physical disabilities. The EXG signal is obtained using electrodes to detect the electrical activity within the brain/eyes. This signal is analyzed using an ESP32 microcontroller to determine commands from the user to move the wheelchair. Within the system, there are 2 ESP32s to provide wireless communication between the signal pickup unit and motor control unit. L298N motor drivers direct the wheels of the wheelchair depending on the commands sensed. In addition, an Ultrasonic sensor is included to detect obstacles within the path of the wheelchair, increasing safety for users. Finally, using the Blynk application, users can monitor the wheelchair in real time and manually control it, using a mobile phone and IoT technology. Overall, this system allows users with restricted physical movement to have increased mobility in a convenient and inexpensive way, due to EXG signal detection, wireless communication, obstacle detection and IoT control.

Keywords: EXG, smart wheelchair, ESP32, ESP-NOW, Bio Amp EXG Pill, L298N, ultrasonic sensor, Blynk, IoT.

INTRODUCTION

Independence can be very difficult for people with significant physical impairments and neuromuscular conditions. Powered wheelchairs are often difficult to use for people with poor dexterity in their hands due to the joystick interface. Therefore, assistive technologies must interpret small physical actions to allow safe movement. In this project, an intelligent wheelchair was created which uses electrophysiological (EXG) signals. Using surface electrodes near the forehead and eyes, electrophysiological signals from the eyes and brain are picked up. From this data, using a microcontroller (ESP32), the intended direction of travel can be determined. The movement data is wirelessly transmitted from the first ESP32 to a second ESP32 fitted in the base of the wheelchair. This reduces messy wiring in the system and also means less electrical interference from the motors. Before movement, an ultrasonic sensor ensures that there are no collisions. A system has been developed using IoT technology (Blynk application) meaning carers can monitor and manually control the system using a smartphone. In conclusion, this system allows independence for physically impaired people at an affordable price safely with no manual movement required.

RELATED WORK

Research on brain-computer interface (BCI) wheelchairs has investigated the use of electroencephalography (EEG), motor imagery and other bio signal paradigms to translate user intent into movement commands. Palumbo et al. reviewed motor-imagery EEG-based BCI systems for wheelchair movement and control [1]. Huang et al. described an electrooculography (EOG)-based human-machine interface for wheelchair control using eye movements and blinks [2]. Other work has examined SSVEP-based wheelchair control and hybrid interfaces combining SSVEP and EOG [5], [6]. Reviews of EEG-based BCI paradigms discuss signal acquisition, feature processing and classification approaches relevant to assistive control [8]. The present project focuses on a prototype implementation using a Bio Amp EXG Pill module, ESP32-based command processing, ESP-NOW communication, obstacle sensing and Blynk-based manual control.

IJIREEICE ISSN (O) 2321-2004, ISSN (P) 2321-5526

International Journal of Innovative Research in Electrical, Electronics, Instrumentation and Control Engineering

Impact Factor 8.414 ⁜ Peer-reviewed / Refereed journal ⁜ Vol. 14, Issue 11, November 2026

DOI: 10.17148/IJIREEICE.2026.141119

PROPOSED SYSTEM AND METHODOLOGY

System Architecture:

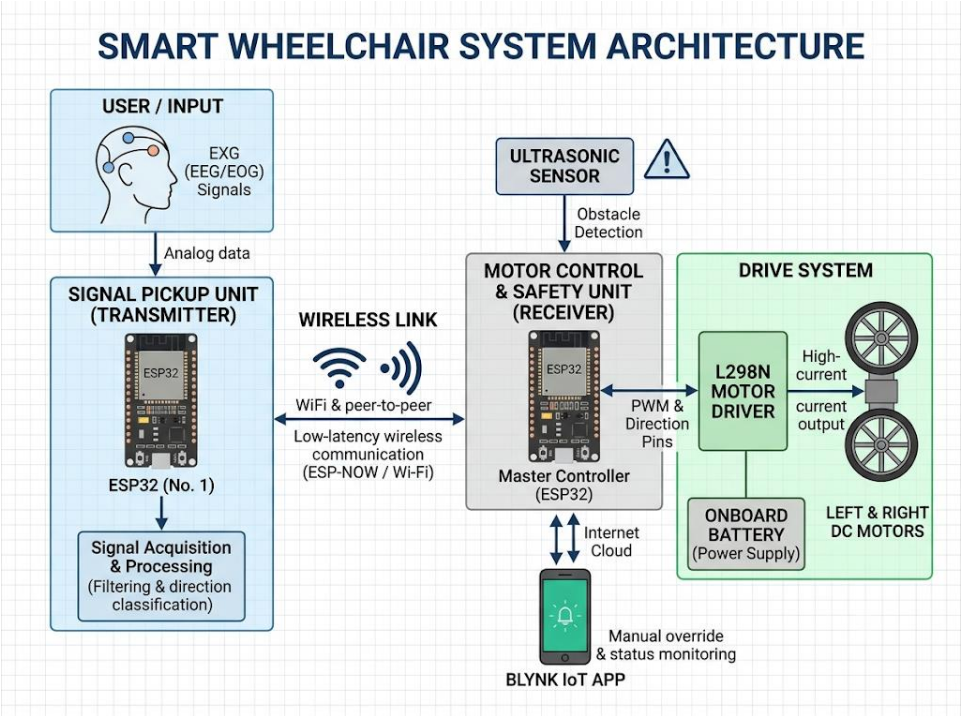

Figure 1: Functional Diagram

The proposed system consists of two ESP32-based control units and an IoT-enabled mobile application. The first ESP32 acts as the transmitter unit and is responsible for acquiring and processing bioelectrical signals from the user. The second ESP32 acts as the receiver unit and controls the wheelchair movement according to the commands received from the transmitter. A Bio Amp EXG Pill module connected to electrodes acquires the user's bioelectrical signals and provides an amplified output to the transmitter ESP32.

The transmitter processes the acquired signals using the programmed control logic to identify predefined movement commands. These commands are transmitted wirelessly to the receiver ESP32 using ESP-NOW communication. The receiver interprets the received commands and controls the DC gear motors through an L298N motor driver. An ultrasonic sensor is incorporated for obstacle detection and automatic stopping when an obstacle is detected within the configured safety threshold. Additionally, the Blynk mobile application provides an alternative manual-control interface and enables wheelchair status monitoring through Wi-Fi connectivity.

EXG Signal Acquisition and Processing

The EXG signal acquisition unit consists of electrodes, a Bio Amp EXG Pill module and an ESP32 transmitter. The electrodes acquire bioelectrical signals from the user and provide them to the appropriate input terminals of the EXG module. The module amplifies the acquired signals and generates an output suitable for processing by the ESP32 microcontroller.

The amplified signal is supplied to the analog input of the transmitter ESP32. The microcontroller reads the acquired signal and processes it according to the programmed algorithm to identify predefined movement commands. Based on the implemented control logic, the commands are used to represent wheelchair operations such as forward, backward, left, right and stop. The identified movement commands are then prepared for wireless transmission to the receiver unit.

ESP32 Wireless Communication and Motor Control

The proposed system uses two ESP32 microcontrollers to separate EXG signal acquisition and motor-control operations. The transmitter ESP32 sends the identified movement commands to the receiver ESP32 through ESP-NOW wireless communication. The receiver listens for incoming commands, interprets the received information and generates the corresponding control signals for the L298N motor driver.

IJIREEICE ISSN (O) 2321-2004, ISSN (P) 2321-5526

International Journal of Innovative Research in Electrical, Electronics, Instrumentation and Control Engineering

Impact Factor 8.414 ⁜ Peer-reviewed / Refereed journal ⁜ Vol. 14, Issue 11, November 2026

DOI: 10.17148/IJIREEICE.2026.141119

The L298N motor driver acts as the interface between the receiver ESP32 and the wheelchair's DC gear motors. It controls the direction of motor rotation according to the received movement command. The motor-control arrangement supports forward, backward, left, right and stop operations. This wireless communication arrangement reduces the requirement for direct signal wiring between the EXG acquisition unit and the motor-control unit.

Obstacle Detection and Safety Control

An ultrasonic sensor is connected to the receiver ESP32 to detect obstacles in front of the wheelchair. The sensor transmits ultrasonic waves and receives the reflected signals from nearby objects. The distance is calculated using the time taken for the transmitted signal to return to the sensor.

The receiver ESP32 continuously checks the measured distance against a predefined safety threshold. When an obstacle is detected within the configured limit, the controller stops the motors by disabling the motor-driving operation. If the path is clear, the receiver executes the movement command received from the transmitter. This obstacle-detection mechanism provides an additional safety feature during wheelchair operation.

IoT Integration and Manual Control

The Blynk IoT application is integrated with the receiver ESP32 through Wi-Fi connectivity. It provides an alternative manual-control facility through a smartphone interface. The application includes movement controls such as forward, backward, left, right and stop, allowing the user or caregiver to operate the wheelchair manually when required.
The ESP32 receiver communicates with the Blynk cloud platform to receive manual movement commands and update available wheelchair status information. The mobile application provides a convenient interface for monitoring and controlling the wheelchair. The integration of EXG-based operation and Blynk-based manual control provides two different methods of wheelchair interaction.

Overall, the proposed system integrates bioelectrical signal acquisition, ESP32-based processing, ESP-NOW wireless communication, motor control, ultrasonic obstacle detection and IoT-based manual operation. The developed prototype is intended to provide an alternative mobility-control platform for individuals with severe physical disabilities and limited physical movement.

Hardware Circuit Design and Connections

The hardware circuit diagrams illustrate the connections and arrangement of components used in the proposed EXG-Based Smart Wheelchair with ESP32 and IoT Control. The system consists of an EXG signal acquisition and transmitter unit and a receiver and motor-control unit. The transmitter unit is connected to the Bio Amp EXG Pill module and electrodes to acquire bioelectrical signals from the user. The receiver unit is connected to the motor driver, DC motors and ultrasonic sensor to control wheelchair movement and detect obstacles. Both ESP32 units communicate wirelessly using ESP-NOW, while the Blynk mobile application provides an additional interface for manual control and monitoring through Wi-Fi.

EXG Signal Acquisition and Data Processing

The EXG signal acquisition unit consists of electrodes, a Bio Amp EXG Pill module and an ESP32 transmitter. The electrodes acquire bioelectrical signals from the user and provide them to the Bio Amp EXG Pill module. The module amplifies the acquired signals and provides an output to the analog input of the ESP32. The transmitter ESP32 processes the signals according to the programmed logic and identifies predefined movement commands. These commands are prepared for wireless transmission to the receiver unit.

Wireless Communication and Motor Control

The proposed system uses two ESP32 microcontrollers for wireless communication and wheelchair control. The transmitter ESP32 sends the identified movement commands to the receiver ESP32 using ESP-NOW communication. The receiver processes the received commands and generates control signals for the L298N motor driver. The motor driver controls the connected DC gear motors to perform forward, backward, left, right and stop operations. This arrangement enables wireless control of wheelchair movement based on the commands generated by the EXG signal-processing unit.

Obstacle Detection and IoT Integration

An ultrasonic sensor is connected to the receiver ESP32 to detect obstacles in the wheelchair's path. The sensor measures the distance to nearby objects and sends the information to the receiver microcontroller. When an obstacle is detected within the configured safety threshold, the ESP32 stops the motors through the L298N motor driver.

IJIREEICE ISSN (O) 2321-2004, ISSN (P) 2321-5526

International Journal of Innovative Research in Electrical, Electronics, Instrumentation and Control Engineering

Impact Factor 8.414 ⁜ Peer-reviewed / Refereed journal ⁜ Vol. 14, Issue 11, November 2026

DOI: 10.17148/IJIREEICE.2026.141119

The Blynk mobile application communicates with the receiver ESP32 through Wi-Fi connectivity. It provides an alternative manual-control interface and allows monitoring of available wheelchair status information. A battery and power supply provide the required electrical energy to operate the system components. This integration combines obstacle detection, manual control and IoT-based monitoring with EXG-based wheelchair operation.

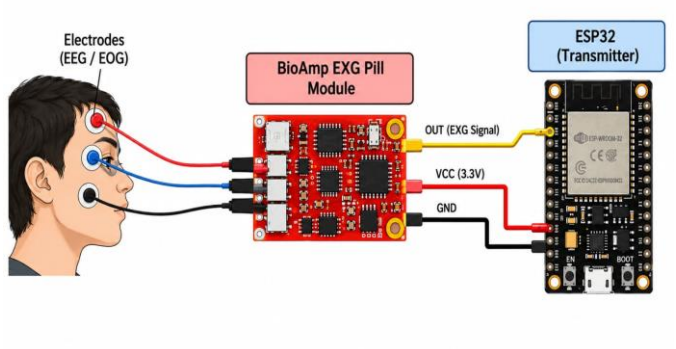

Figure 1: Exg signal acquisition and data processing

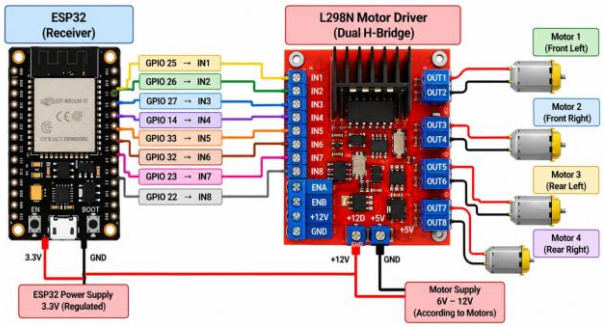

Figure 2: Wireless Communication and Motor Control

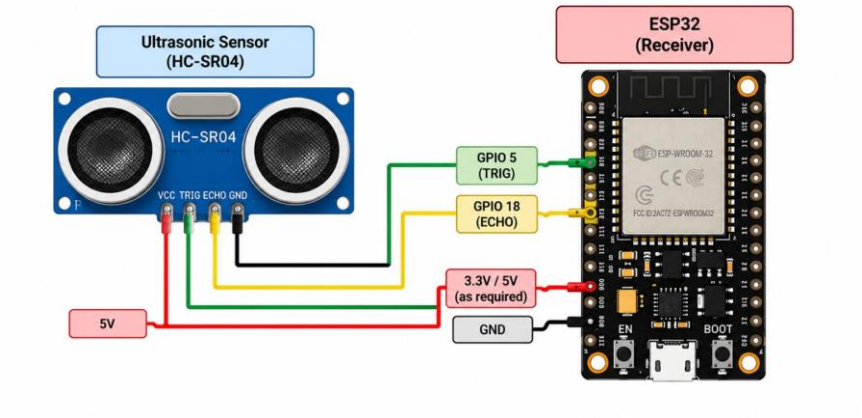

Figure 3: Obstacle detection and Iot integration

RESULTS AND DISCUSSION

The developed smart wheelchair prototype was successfully tested across multiple indoor trials to evaluate its responsiveness, wireless stability, and safety features. The EXG acquisition unit reliably captured eye and brain potentials with minimal noise, allowing the first ESP32 to classify movement commands accurately. Low-latency wireless communication between the two ESP32 microcontrollers ensured smooth real-time motor actuation through the L298N drivers. Furthermore, the ultrasonic sensor consistently halted the wheelchair whenever obstacles entered the critical range, effectively preventing collisions.

During performance evaluation, isolating the signal pickup unit from the motor control unit greatly reduced electromagnetic interference from the DC motors. Integration with the Blynk IoT platform provided seamless real-time status monitoring and responsive manual override via smartphone for caregivers. Minor signal variations occurred only during abrupt head movements, underscoring the importance of firm electrode contact for consistent accuracy. Overall, the findings confirm that this dual-ESP32 design offers a reliable, affordable, and safe hands-free mobility solution for physically restricted users.

IJIREEICE ISSN (O) 2321-2004, ISSN (P) 2321-5526

International Journal of Innovative Research in Electrical, Electronics, Instrumentation and Control Engineering

Impact Factor 8.414 ⁜ Peer-reviewed / Refereed journal ⁜ Vol. 14, Issue 11, November 2026

DOI: 10.17148/IJIREEICE.2026.141119

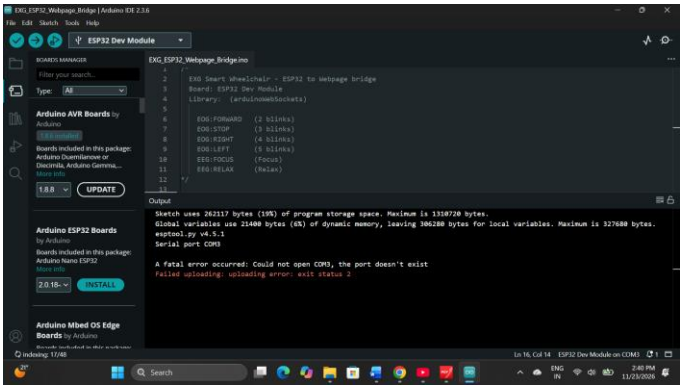

Figure 4: Display of Dashboard Showing the Values

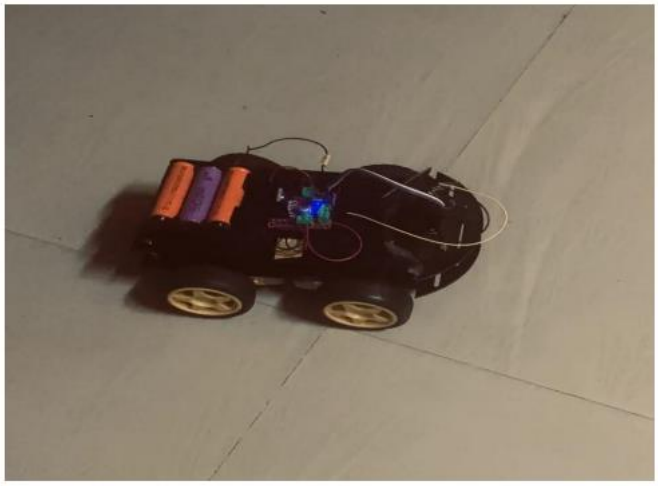

Figure 5: Developed Model of Exg Based Smart Wheelchair with Esp32 and Iot Control

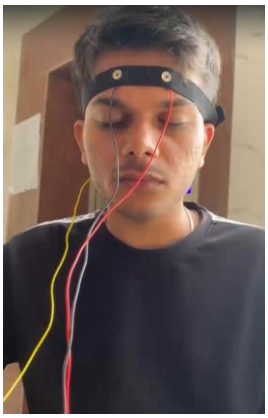

Figure 5: EEG electrode placement using a wearable headband electrode.

CONCLUSION AND FUTURE SCOPE

The EXG-Based Smart Wheelchair with ESP32 and IoT Control combines bio signal acquisition, embedded processing, wireless communication, motor actuation, obstacle detection and smartphone-based control. The Bio Amp EXG Pill module acquires electrical signals through electrodes, the transmitter ESP32 identifies predefined commands, and ESP-NOW transfers these commands to the receiver ESP32. The receiver operates the DC motors through the L298N driver and uses an ultrasonic sensor to stop movement when an obstacle is within the configured safety distance. Blynk provides an additional manual-control and monitoring interface.

DOI: 10.17148/IJIREEICE.2026.141119

The project establishes a prototype platform for assistive mobility. Future work identified in the report includes AI-based signal processing, additional obstacle sensors, battery-level monitoring, voice control, emergency alerts, improved battery management and ergonomic improvements. Further testing should quantify signal-recognition performance, obstacle response, communication reliability, operating time and safe operation with representative users.

REFERENCES

[1]. A. Palumbo, V. Gramigna, B. Calabrese, and N. Ielpo, "Motor-imagery EEG-based BCIs in wheelchair movement and control: A systematic literature review," Sensors, vol. 21, no. 18, Art. no. 6285, 2021.

[2]. Q. Huang, S. He, Q. Wang, Z. Gu, N. Peng, K. Li, and Y. Zhang, "An EOG-Based Human-Machine Interface for Wheelchair Control," vol. 9294, pp. 1–11, 2017.

[3]. C. M. Lakshmana and I. Maruthi, "The disabled population and their educational status in India," Periferia, vol. 10, pp. 135–157, Jul. 2018.

[4]. S. Prasad, IoT-based smart wheelchair system supporting smartphone-based remote control and monitoring. Bibliographic publication details were not provided in the project report.

[5]. R. Singla, A. Khosla, and R. Jha, "Influence of stimulus color in SSVEP-based BCI wheelchair control using support vector machines," Journal of Medical Engineering & Technology, vol. 38, no. 3, pp. 125–134, 2014.

[6]. X. Mai, J. Ai, M. Ji, X. Zhu, and J. Meng, "A hybrid BCI combining SSVEP and EOG and its application for continuous wheelchair control," Biomedical Signal Processing and Control, vol. 88, Art. no. 105530, 2024.

[7]. M. Akila, K. SathiyaSekar, and A. Suresh, "Smart brain-controlled wheelchairs and devices based on EEG for disabled person at a low cost," 2015.

[8]. R. Abiri, S. Borhani, E. W. Sellers, Y. Jiang, and X. Zhao, "A comprehensive review of EEG-based brain-computer interface paradigms," Journal of Neural Engineering, vol. 16, no. 1, Art. no. 011001, 2019.

[9]. S. Ghasemi, D. Gracanin, and M. Azab, "Empowering Mobility: Brain-Computer Interface for Enhancing Wheelchair Control," IEEE Access, vol. 12, pp. 45789–45797, 2024.